MATERIAL:316 S/S MIRROR POLISH

TOP FIX D/PLATE

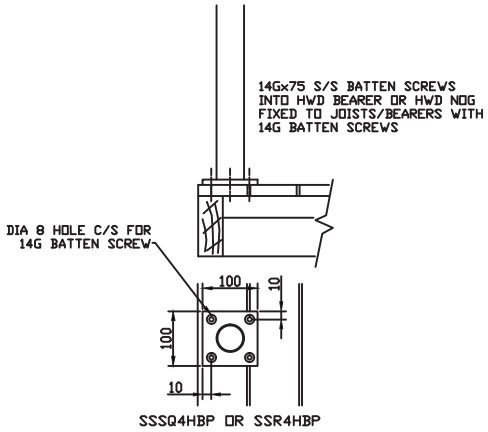

SS50RDEP SS50RDLEP

SIDE FIX B/PLATE

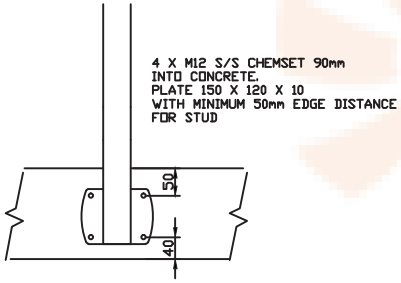

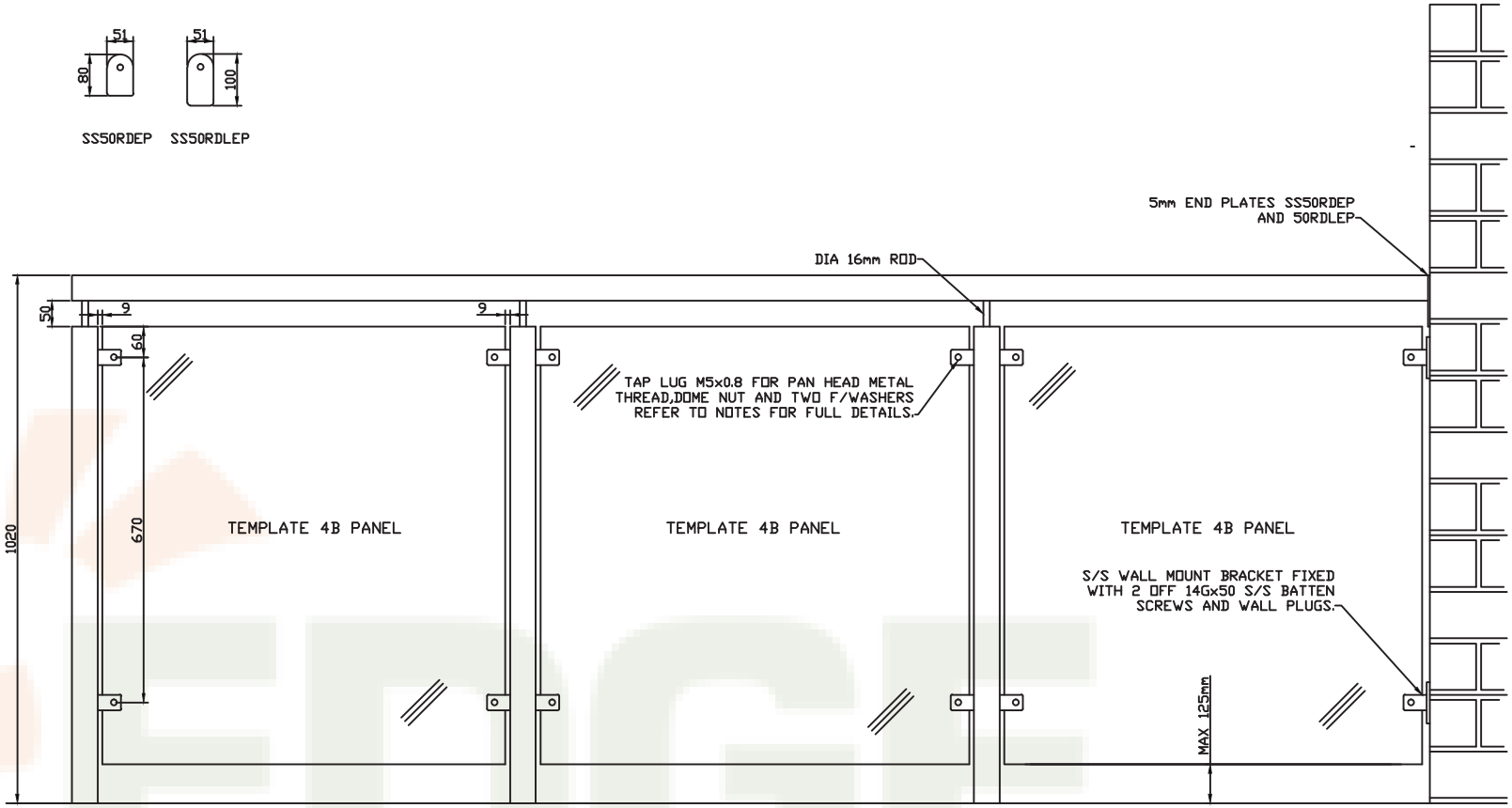

NOTES:POST= DIA 50mmx 3
:HEAVY DUTY WELD ON LUG ALWAYS TO THE OUTSIDE/HEAVY DUTY RETAINER TO THE INSIDE.
:HEAVY DUTY WELD ON LUG PROVIDED WITH DIA.5.5mm HOLE TO TAP M6x.8.
:M6x20 S/S PAN HEAD METAL THREAD FOR 8 & 10mm GLASS.
:COVER M6 METAL THREADS WITH 1/4' BLUE AIR LINE CUT 6-10mm THICK TO PROTECT GLASS.
:FACES OF LUGS IN CONTACT WITH GLASS TO BE COVER WITH SELF ADHESIVE RUBBER.

CORE DRILL FIXING

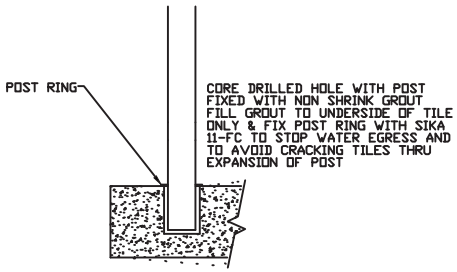

EDGE CONCEPTS
(QLD) PTY LTD
50-52 KABI CIRCUIT
DECEPTION BAY 4508
PH.3897 8700
FAX.3897 8777

PART NO.
HEAVY DUTY DESIGN 9 S/S BAL.

DESCRIPTION.
GLASS BALUSTRADING

SCALE: NTS	DATE:NOV 2007	DRAWN: AHS.